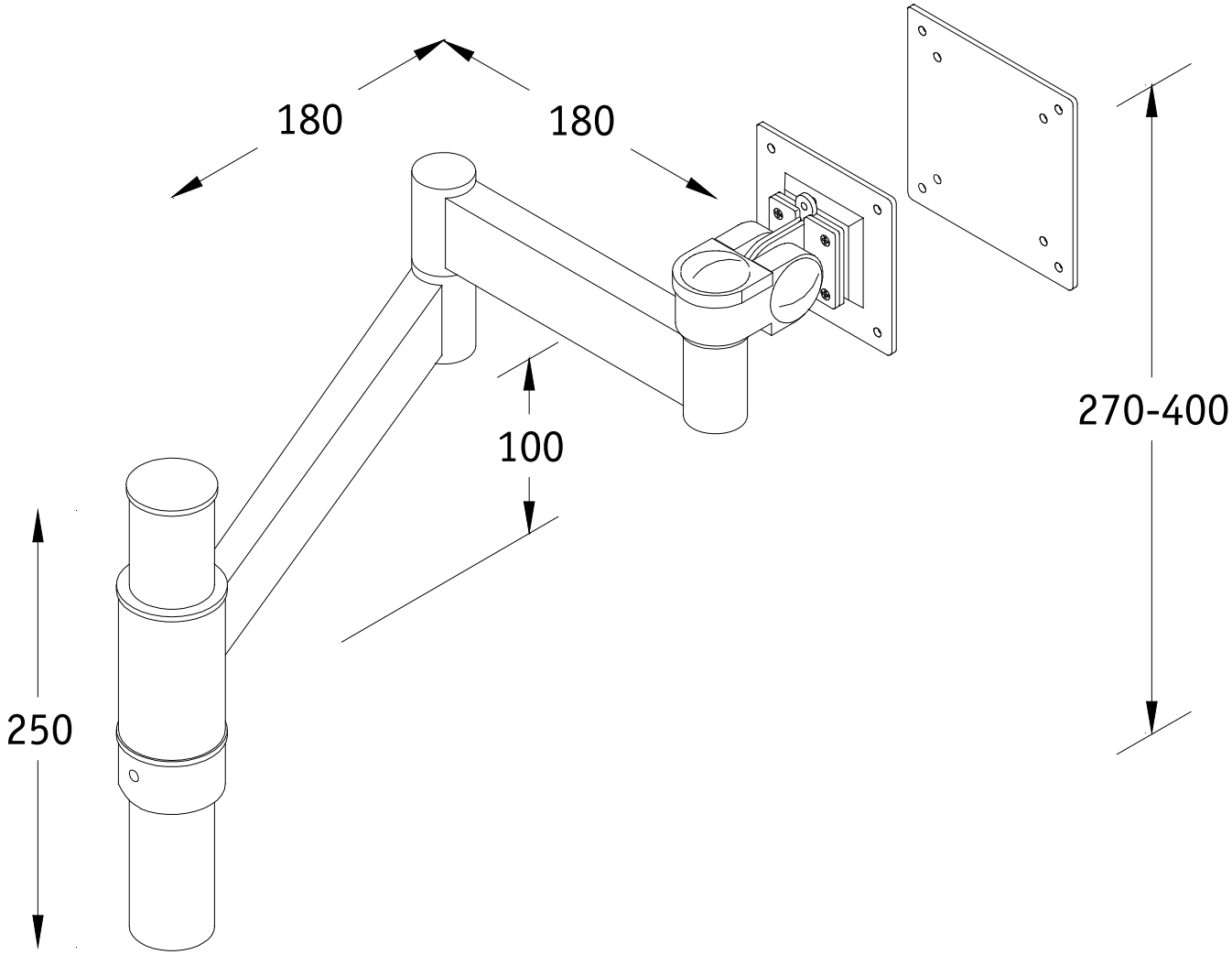

All dimensions in mm.

Dataflex®

COMPUTER FURNITURE
AND ACCESSORIES

DATA-INFO # 51.362

Dataflex®
is a registered
trademark of
VIKING A.C. EUROPE BV
P.O. Box 713
NL-2920 CA
Krimpen a/d Ijssel